ARMATUREN GmbH

OVERFLOW REGULATOR
TYPE 92-99

OUR DIVERSITY IS
YOUR PROFIT.

Overflow regulator Type 92 - 99

Overflow regulators ensure a pressure level, e.g. the discharge pressure of a compressor, an intake pressure or even a differential pressure against exceeding under or over a pressure limit. Type designation 92 to 99 describes the respective safety variant.
All types are based on the same valve body. The different functions are realised by allocation of the control devices, their combination and type of connection.
All series 92 to 99 overflow regulators open during start-up of the connected pressure system. This is advantageous for compressor machines since they do not have to start against the discharge pressure of the system.
Basic design of the overflow regulators equates to R+A pressure control valves which are approved for all gases according to DVGW standard G 260.
Devices with suitable materials and special fittings are available for other gases – especially aggressive gases.

Properties

- Flange connections according to customer requirements (including ANSI- and special flanges)
- Primary noise dampening for reducing expansion (attenuation approx. 10 - 20 dB) in option
- Available with blow-off muffler for reducing flow noises (attenuation approx. 10 - 20 dB)
- Wide supply pressure range
- Valve length adjustable to match local circumstances
- Corner model E, through-feed model and special designs available on request
- Pressure balanced valve mechanism by use of a compensating diaphragm
- High adjustment accuracy, short reaction time, even lower pressure differences possible
- Low-maintanance; on-site maintanance possible without removing of the valve, no special tools required
- Single ply design, few wearing parts
- Special design H up to 250°C operating temperature possible
- Independent of external energy
- Assembly of the active pipes and presetting of the switch points in the works

Technical data

Supply pressure	Up to 30 bar
Minimal pressure difference	100 mbar; 20 mbar with enlarged working diaphragm
Nominal diameters	DN 50 bis DN500; larger width on request
Connection flanges	DIN-, ANSI- and special flanges
Valve diameter	50 mm to 500 mm
Operating temperature	-15°C to +130°C; 250°C (H-Design)
Medium	Gases according to DVGW-Standard G260 and all non-aggressive gases; other gases in special design
Materials	
Body	Steel/stainless steel
Diaphragm housing	Cast steel / Steel / Stainless steel
Control regulator	Aluminium/Stainless st.
Inner parts	Aluminium/Steel Brass/Stainless steel
Diaphragm, O-Rings	Perbunan, Viton
Cone valve	Perbunan, Viton, Teflon

Setting ranges

Pressure range [bar]	Drawing-number	RG	SG
Control regulator UN/DN/DUN			
0,01 - 0,12	4-St-12/DN/4	5/2,5	10/5
0,12 - 0,30	4-St-12/DN/5	2,5	5
0,30 - 0,60	4-St-12/DN/6	1	2,5
0,60 - 0,75	4-St-12/DN/7	1	2,5
0,75 - 1,00	4-St-12/DN/8	1	2,5
Control regulator UH/DH/DUH			
0,05 - 0,30	4-St-12/DH/4	2,5	5
0,30 - 1,00	4-St-12/DH/5	2,5	5
1,00 - 1,90	4-St-12/DH/6	2,5	5
1,90 - 2,90	4-St-12/DH/7	1	2,5
2,90 - 4,30	4-St-12/DH/8	1	2,5
4,30 - 7,50	4-St-12/DH/9	1	2,5
Control regulator RUHH für high pressure			
7,50 - 30,0	4-St-12/RUHH/	1	2,5

Other setting pressures available on request !

Installation Dimensions Type 94E und 94

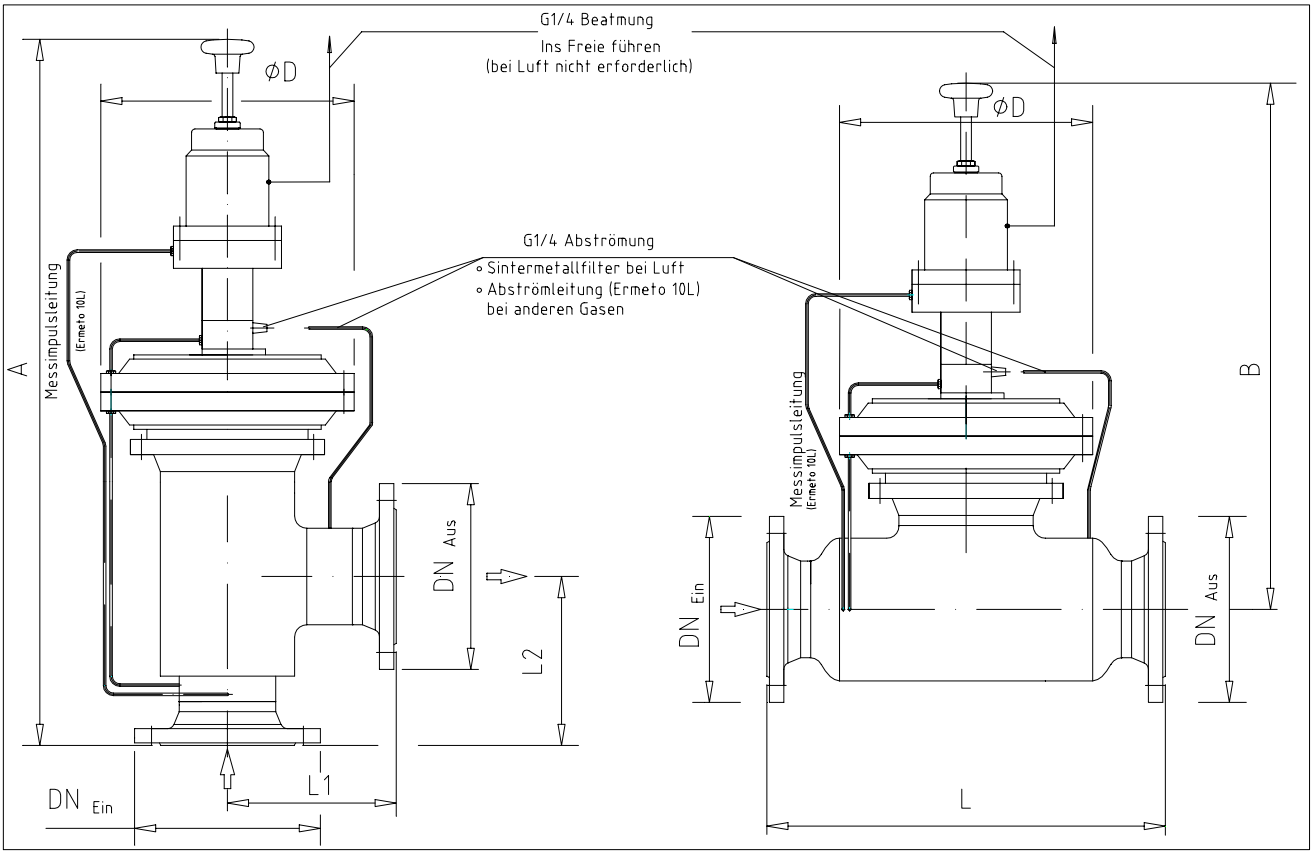

Inlet *1 DN_{Ein}	Outlet *1 DN_{Aus}	Valve-Ø [mm]	L1/L2 *2 [mm]	A *2 appr. [mm]	L [mm]	B appr. [mm]	D Δp≥100mbar [mm]	D Δp≤100mbar [mm]	Weight ca. [kg]
50-150	50-150	50-80	200/200	850	450	650	300	420	55
		100	200/200	850	450	650	420	482	70
		125	200/200	850	500	730	420	482	75
		150	250/250	900	700	750	420	482	110
50-200	200	50-80	250/250	950	500	700	300	420	75
		100		950	500	700	420	482	90
		125		950	500	730	420	482	95
		150		1000	700	750	420	482	130
		200		1000	700	750	482	585	160
50-250	250	50-80	280/280	1080	700	730	300	420	110
		100-125		1080	700	730	420	482	120
		150		1080	800	750	420	482	140
		200		1130	800	750	482	585	180
50-300	300	50-80	320/320	1130	800	750	300	420	130
		100-150					420	482	150
		200					482	585	180

Other dimensions and valve sizes available on request

*1 : Units available with all flanges according to customer requirements

*2 : Units available with other overall lengths

Line Connections

Ventilation	G1/4	Unsold., threaded pipe fitting with cutting ring acc. to DIN 2353 for pipe-Ø 10 x 1,5 mm
Meas.Pulse	G1/4	
Sockets *3	G1/4	

*3 It is possible to install additional two sockets G1/4 or G1/2 at the unit

Flow direction and/or line connections can be changed on customer request

Standard Version

Flow direction	Up-right / left-right
Ventilation	in Flow direction right
Measur. Pulse	in Flow direction left
Flow off	in Flow direction right

Design and Function of Type 94E (94) Overflow Regulator

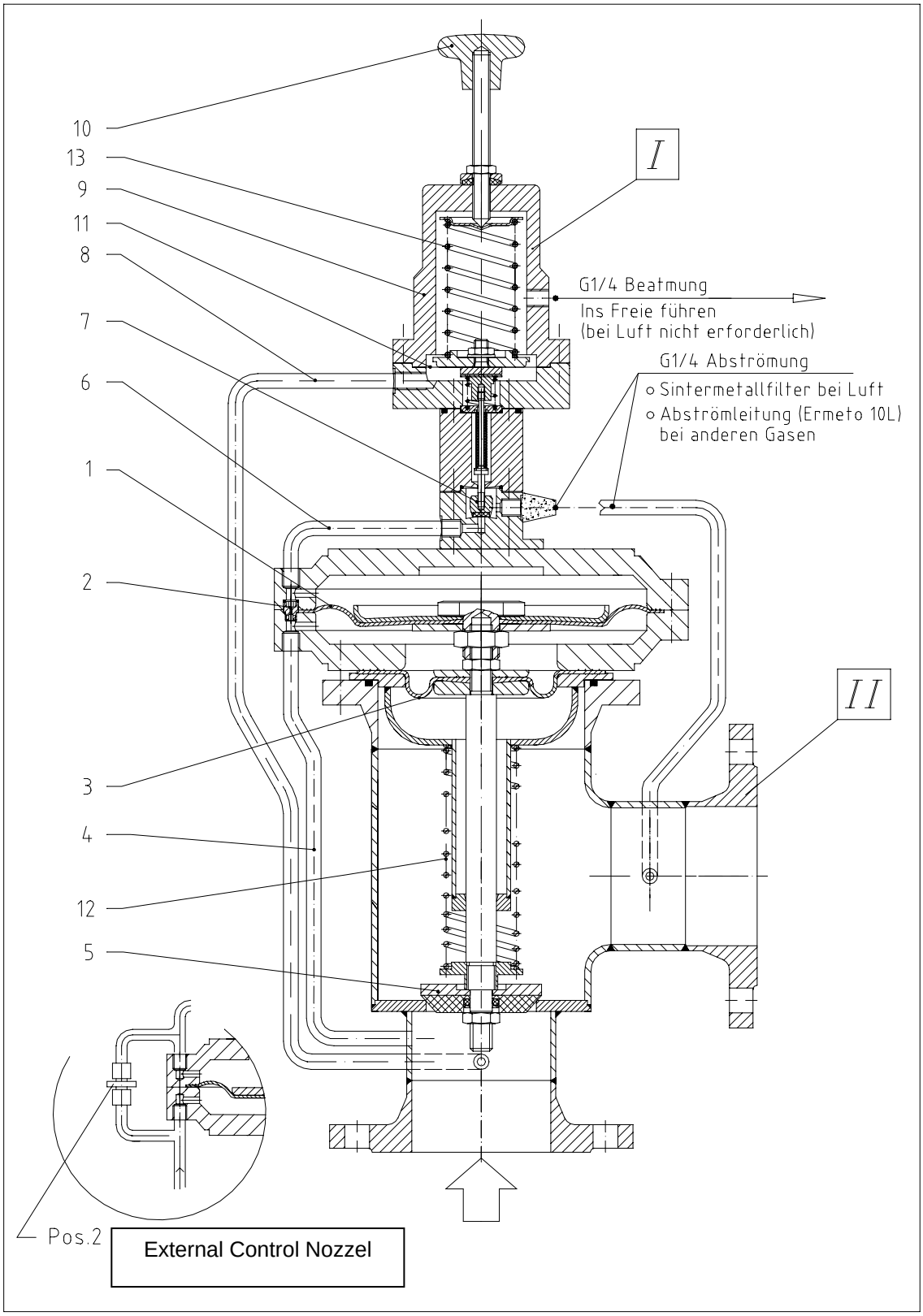

Installation

All overflow regulators can be installed vertically or horizontally in flow direction. If installed vertically it is only necessary to mount the control regulator vertical beneath the control gear.
Only qualified personal is allowed to do start up and maintenance. For demounting of the regulator all parts must be pressureless.

Design

As example for all overflow regulators type 94E is shown beneath with control regulator (**I**) and control gear (**II**).
The control regulator is available in **UH/UN/DUH/DUN** and **DH/DN** for pressure range up to 1 bar respectively 7,5 bar. Control regulator **RUHH** is used for operating pressure greater than 7,5 bar.

Scope of application

Protection of compressor discharge pressure in overpressure range (conrol regulator UH/UN).

Function

Inlet pressure (p_e) is applied under cone valve **5** and as well via control pipe **4** on compensation diaphragm **3** and under working diaphragm **1**; via throttle **2** also in the upper chamber of the diaphragm.
When starting up the compressor, that means increasing inlet pressure, overflow regulator opens because the pressure above working diaphragm **1** increases less fast than in the lower diaphragm chamber due to throttle **2**. Cone valve **5** closes when the pressure in both diaphragm chambers has equalized.
If inlet pressure, which reaches control regulator via control pipe **8** exceeds the set value of adjustment spring **13**, control valve **7** opens and allows gas to flow from upper diaphragm chamber through control pipe **6**. This creates a differential pressure at working diaphragm **1**, which causes cone valve **5** to open.
Discharge pressure is set by using hand wheel **10**. Turning it to the right increases pressure.

Starting apparatus

After properly installing the regulator proceed as follows for start up:

- Release tension of adjustment spring in control regulator
- Close pressure side shut-off valve
- Start up compressor
- Slowly tension adjustment spring of control regulator until desired discharge pressure is reached
- Secure hand wheel with locknut

The overflow regulator is ready for operation. Slowly open pressure side shut-off valve again.

Attention

The line connection of the ventilation hole must end outside in the open air. Because in case of a crack at the diaphragm, witch belongs to the control regulator, it will be possible, that gas flow through the line connection of the ventilation hole.

Unit Layout

The **valve flow coefficient K_G** is the value of the flow rate q through fully opened control regulator while p_e = 2.013 bar abs. and p_a = 1.013 bar abs.; measured under standard conditions on a test bench with air as flow medium.

Valve flow coefficient K_G for overflow regulator type 92 - 99 (related to air)

Valve-Ø [mm]	K_G - value [Nm³/h]	Valve-Ø [mm]	K_G - value [Nm³/h]
50	1.700	150	15.400
65	2.800	175	20.800
80	4.400	200	27.700
100	6.800	250	43.900
125	10.500	300	62.400

Values for larger valve diameters available on request.

The following equations enable to calculate the required K_G value:

K_G - value at subcritical pressure ratio

$$\frac{p_a}{p_e} \geq 0{,}53 : \quad K_G = \frac{q_n}{\sqrt{p_a(p_e - p_a)}} \quad [\text{Nm}^3/\text{h}]$$

(q_n in [Nm³/h]; p_e and p_a in [bar abs.])

K_G - value at supercritical pressure ratio

$$\frac{p_a}{p_e} < 0{,}53 : \quad K_G = \frac{q_n \cdot 2}{p_e} \quad [\text{Nm}^3/\text{h}]$$

When other gases are used, it is necessary to convert q_n with the following corrective factors **f**:

Medium	*f*	Medium	*f*
Ammonia	1,30	Methane	1,35
Butane	0,69	Municipal gas	1,53
$C0_2$	0,81	Oxygen	0,94
Nat. gas L	1,26	Nitrogen	1,01
Air	1,30	Hydrogen	3,92

Values for other mediums available on request.

Conversion equation: $$q_n = \frac{q_{nMedium}}{f} \quad [\text{Nm}^3/\text{h}]$$

Calculation of **nominal connection with**:

$$D_{\min} = \sqrt{\frac{q_n \cdot 1{,}3 \cdot (273 + T)}{p \cdot v_{\max}}} \quad [\text{mm}]$$

q_n : [Nm³/h]; p : [bar abs.]: v_{max} : [m/s]; T : [°C]
v_{max} = max. permissible flow velocity

Optimum valve diameter and nominal connection width can be calculated for each medium and unit with a computer program in our office.

Overflow regulator Type 92/92E

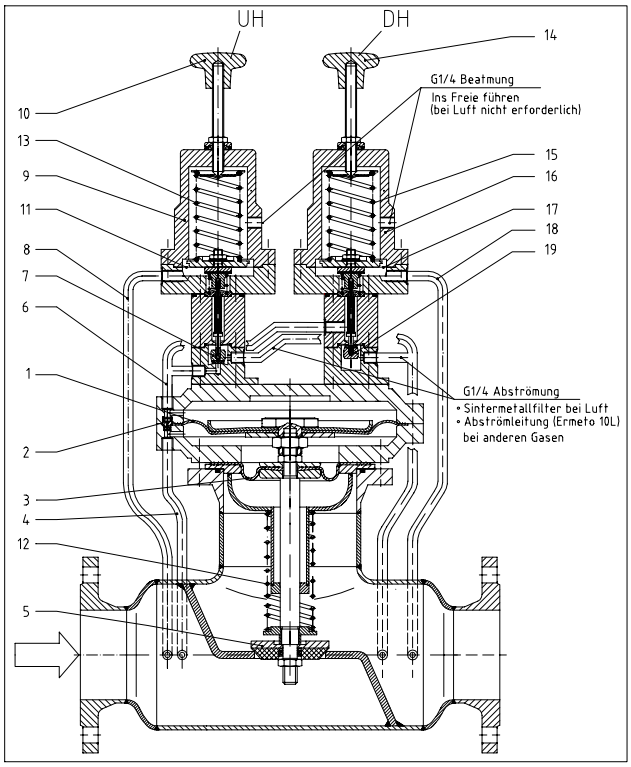

Scope of Application

- Securing discharge pressure in overpressure range (Control regulator UH/UN)
- Securing intake pressure in overpressure range (Control regulator DH/DN)

Function

Inlet pressure (pe) is applied under cone valve **5** and as well via control pipe **4** on compensation diaphragm **3** and under working diaphragm **1**; via throttle **2** also in the upper chamber of the diaphragm.
When starting up the compressor, that means increasing inlet pressure, overflow regulator opens because the pressure above working diaphragm **1** increases less fast than in the lower diaphragm chamber due to throttle **2**. Cone valve **5** closes when the pressure in both diaphragm chambers has equalized.
Securing discharge pressure: If inlet pressure, which reaches control regulator via control pipe **8** exceeds the set value of adjustment spring **13**, control valve **7** opens and allows gas to flow from upper diaphragm chamber through control pipe **6**. This creates a differential pressure at working diaphragm **1**, which causes cone valve **5** to open.
Discharge pressure is set by using hand wheel **10**. Turning it to the right increases pressure.
Securing intake pressure: If compressor intake pressure, which reaches under diaphragm **17** of control regulator DH via control pipe **18** falls below

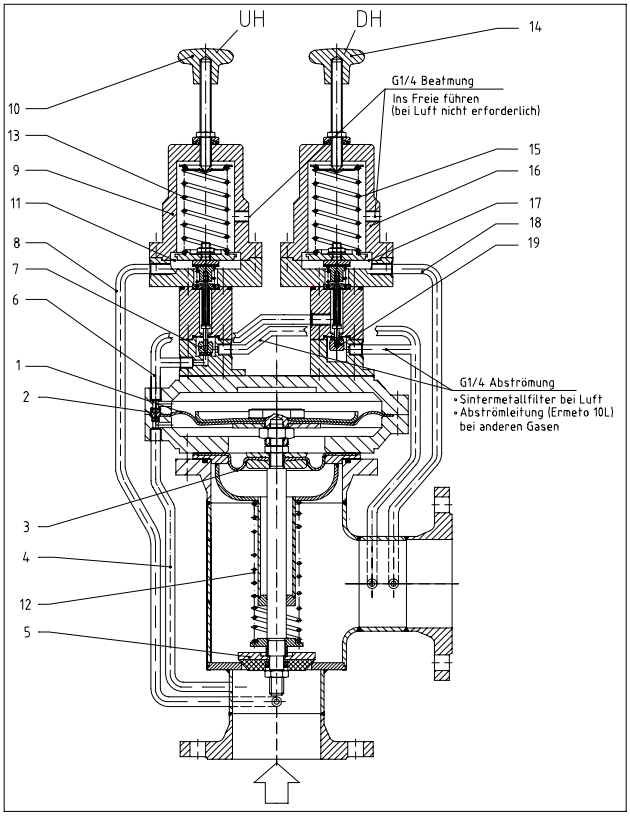

the set value of adjustment spring **15**, control valve **19** opens and allows gas to flow from upper diaphragm space via control pipe **6**. This creates a differential pressure at working diaphragm **1**, which causes cone valve **5** to open.
Intake pressure is set by using hand wheel **14**. Turning it to the right increases pressure.

Starting apparatus

After properly installing the regulator proceed as follows for start up:
- Open shut-off valve on compressor intake side
- Close pressure side shut-off valve
- Close control regulator DH for intake pressure, meaning relax adjustment spring completely
- Open control regulator UH for discharge pressure, meaning relax adjustment spring completely
- Start up compressor
- Set discharge pressure at control regulator UH as for type 94
- Do not switch off compressor
- Slightly open shut-off valve on pressure side
- Slowly close the shut-off valve on intake side until the desired intake pressure is reached
- Slowly tension (turn to right) adjustment spring of control regulator DH until switch point is reached
- Secure handwheel with locknut

The overflow regulator is ready for operation. Slowly open intake and pressure side shut-off valves again.

Overflow Regulator Type 95/95E

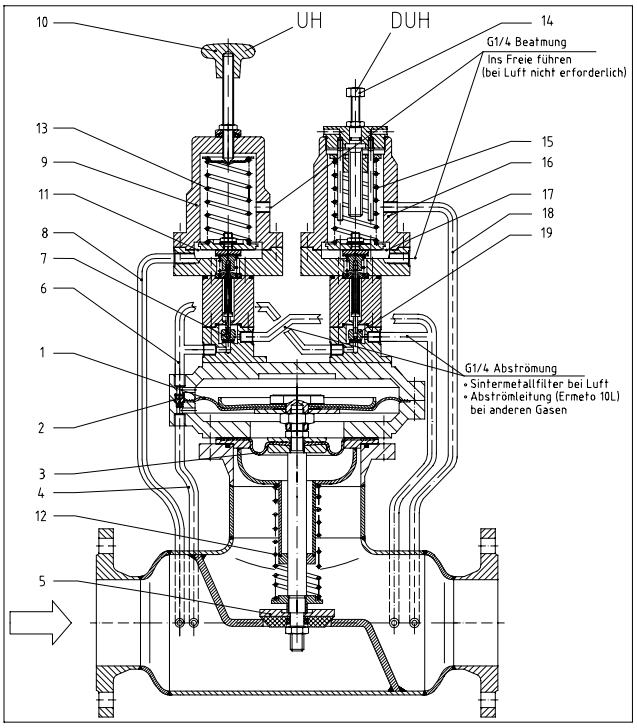

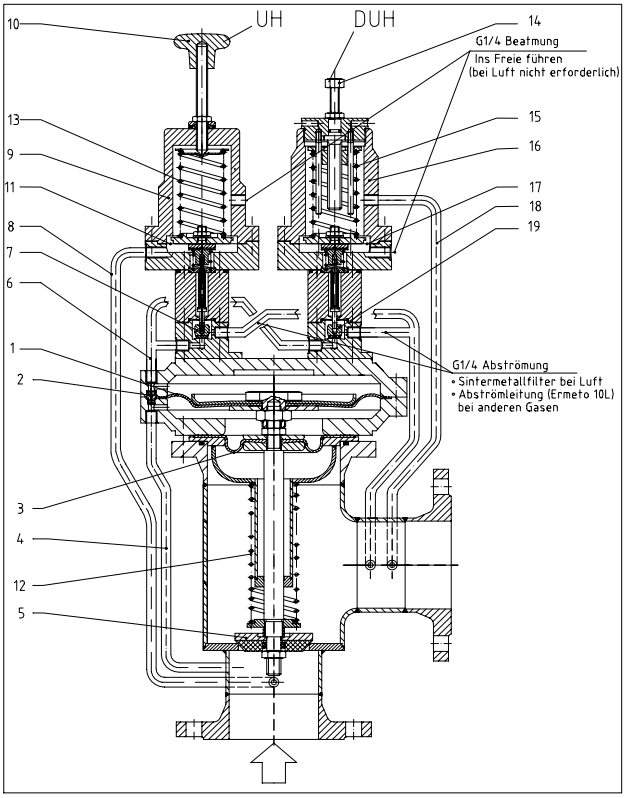

Scope of Application

- Securing discharge pressure in overpressure range (Control regulator UH/UN)
- Securing intake pressure in underpressure range (Control regulator DUH/DUN)

Function

Inlet pressure (pe) is applied under cone valve **5** and as well via control pipe **4** on compensation diaphragm **3** and under working diaphragm **1**; via throttle **2** also in the upper chamber of the diaphragm.
When starting up the compressor, that means increasing inlet pressure, overflow regulator opens because the pressure above working diaphragm **1** increases less fast than in the lower diaphragm chamber due to throttle **2**. Cone valve **5** closes when the pressure in both diaphragm chambers has equalized.
Securing discharge pressure: If inlet pressure, which reaches control regulator via control pipe **8** exceeds the set value of adjustment spring **13**, control valve **7** opens and allows gas to flow from upper diaphragm chamber through control pipe **6**. This creates a differential pressure at working diaphragm **1**, which causes cone valve **5** to open.
Discharge pressure is set by using hand wheel **10**. Turning it to the right increases pressure.

Securing intake pressure: If compressor intake pressure, which reaches above diaphragm **17** of control regulator DUH via control pipe **18** exceeds the set value of adjustment spring **15**, control valve **19** opens and allows gas to flow from upper diaphragm space via control pipe **6**. This creates a differential pressure at working diaphragm **1**, which causes cone valve **5** to open.
Intake pressure is set by using hand wheel **14**. Turning it to the right increases underpressure.

Starting apparatus

After properly installing the regulator proceed as follows for start up:
- Open shut-off valve on compressor intake side
- Close pressure side shut-off valve
- Close control regulator DUH for intake pressure, meaning tension adjustment spring
- Open control regulator UH for discharge pressure, meaning relax adjustment spring
- Start up compressor
- Set discharge pressure at control regulator UH as for type 94
- Do not switch off compressor
- Slightly open shut-off valve on pressure side
- Slowly close the shut-off valve on intake side until the desired intake pressure is reached
- Slowly relax (turn to left) adjustment spring of control regulator DH until control regulator switch point is reached
- Secure handwheel with locknut

The overflow regulator is ready for operation. Slowly open intake and pressure side shut-off valves again.

Overflow Regulator Type 96/96E

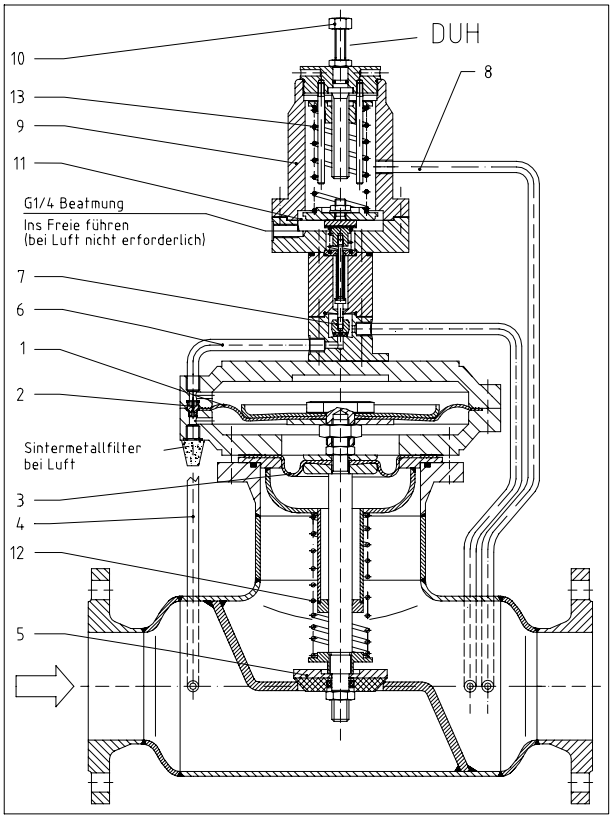

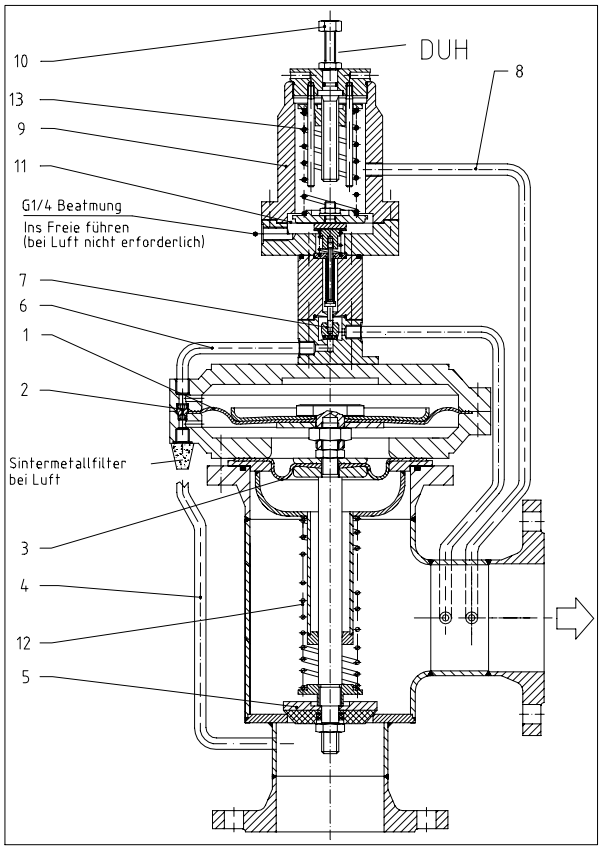

Scope of Application

- Securing intake pressure in underpressure range (Control regulator DUH/DUN)

Function

Inlet pressure (pe) is applied under cone valve **5** and as well via control pipe **4** on compensation diaphragm **3** and under working diaphragm **1**; via throttle **2** also in the upper chamber of the diaphragm.
When starting up the compressor, that means increasing inlet pressure, overflow regulator opens because the pressure above working diaphragm **1** increases less fast than in the lower diaphragm chamber due to throttle **2**. Cone valve **5** closes when the pressure in both diaphragm chambers has equalized.
If compressor intake pressure, which reaches above diaphragm **11** of control regulator DUH via control pipe **8** exceeds the set value of adjustment spring **13**, control valve **7** opens and allows gas to flow from upper diaphragm space via control pipe **6**. This creates a differential pressure at working diaphragm **1**, which causes cone valve **5** to open.

Intake pressure is set by using hand wheel **10**. Turning it to the right increases underpressure.

Starting apparatus

After properly installing the regulator proceed as follows for start up:
- Open shut-off valve on compressor intake side
- Close control regulator DUH/DUN for intake pressure, meaning tension adjustment spring
- Slightly open pressure side shut-off valve
- Start up compressor
- Slowly close the shut-off valve on intake side until the desired intake pressure is reached
- Slowly relax (turn to left) adjustment spring of control regulator DH until control regulator switch point is reached
- Secure handwheel with locknut

The overflow regulator is ready for operation. Slowly open intake and pressure side shut-off valves again.

Other Types, Variants und Accessories

By combining the control regulators and different connection modes, additional regulator types for different applications can be realised.
Special models and purposeful accessories allow a diverse range of tasks to be solved.

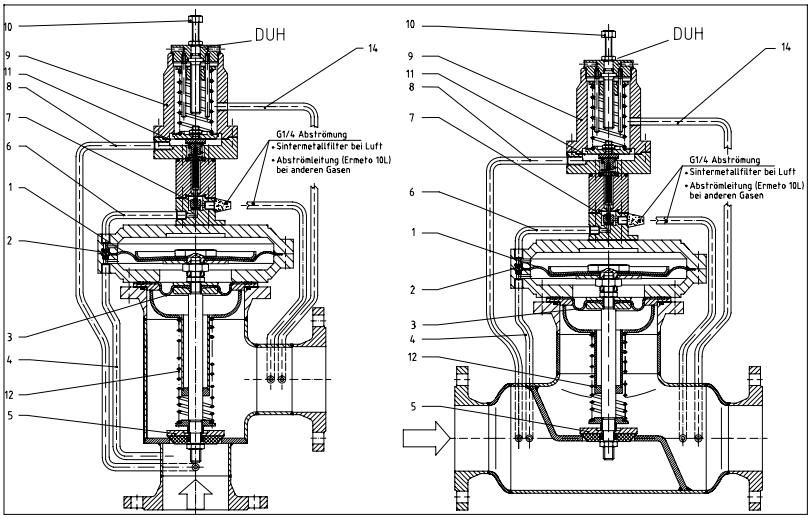

Overflow Regulator Type 97E/97

Scope of Application

Securing differential pressure between discharge and intake pressure.
(Control Regulator DUH/DUN)

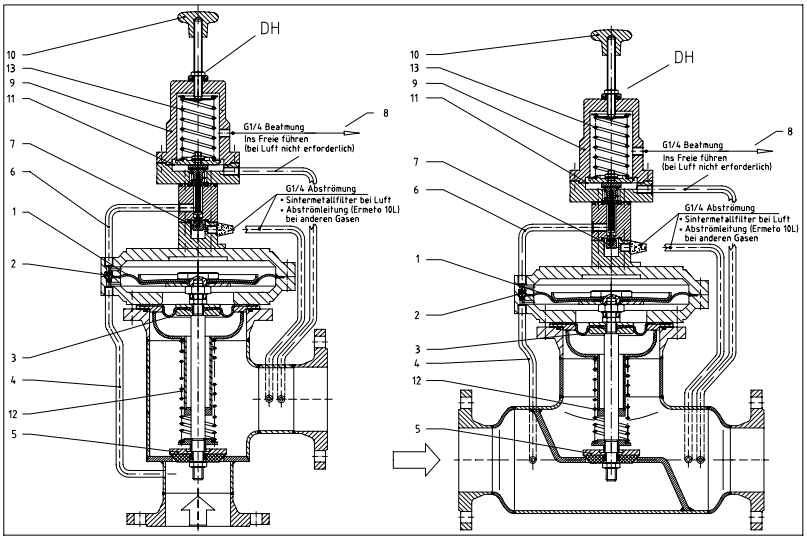

Overflow Regulator Type 99E/99

Scope of Application

Securing intake pressure
In overpressure range
(Control Regulator DH/DN)

Hot Gas Model

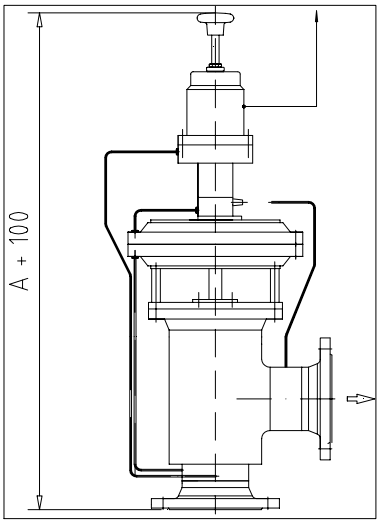

Diaphragm materials Perbunan und Viton limit the possibility of using the overflow regulator for high gas temperatures due to their lacking high temperature resistance. Therefore, for media temperatures above 180°C up to around 250°C, the hot gas model – identified by the additional symbol H in type designation – is used.
The diaphragm housing is installed on the regulator housing using spacers so that the media temperature is not applied directly to the diaphragms

Starting Relief

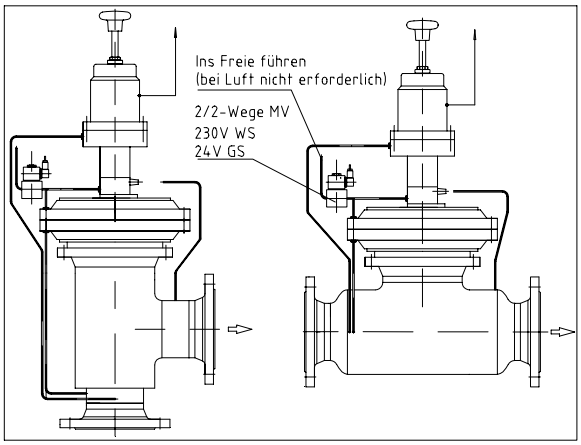

The construction of starting relief is shown using overflow regulator type 94E as example. The additional attached **2/2-Way Solenoid Valve** is currentless open. When starting the plant, the overflow regulator is forced to open by the opened solenoid valve and no impermissible overpressure can form on pressure side of the compressor.
After the plant rated output (compressor speed) is reached, solenoid valve is closed by release of current and the overflow regulator moves into normal position.
If control voltage fails the overflow regulator is forced open and thus realises the safety function for voltage drop.

Primary Sound Absorption

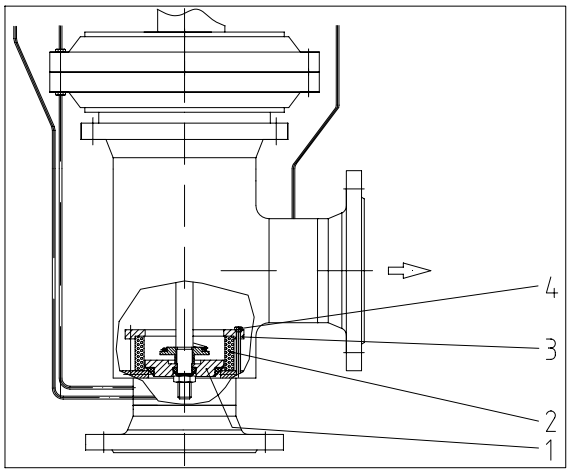

According to the pressure ratio of the overflow regulator high sound intensity can result during expansion. This expansion sound can be reduced approx. 10 – 20 dB by installing a ring-shaped, spongy filling body around the cone valve. Subsequent installation in the works is also possible using hold down clamp **3** and allen screws **4**.

Blowout Silencer

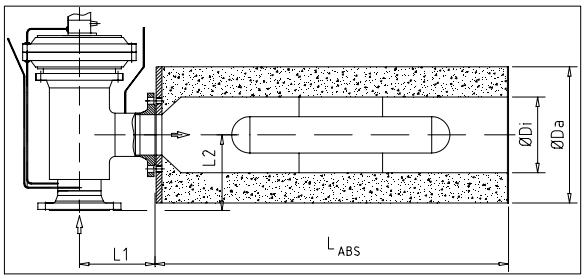

Blow out noise from overflow regulators opening into atmosphere, can effectively be reduced by a directly flange-mounted silencer.
This sound absorber only generate low pressure drop and work in a relatively wide frequency range. They are designed for special application and attain sound reduction up to 20 dB.

Outlet-Flange	L ABS [mm]	Di [mm]	Da [mm]
DN 50 - 150	1500	200	360
> DN 150	Special Design		

Motor Controled Set Value Adjustment

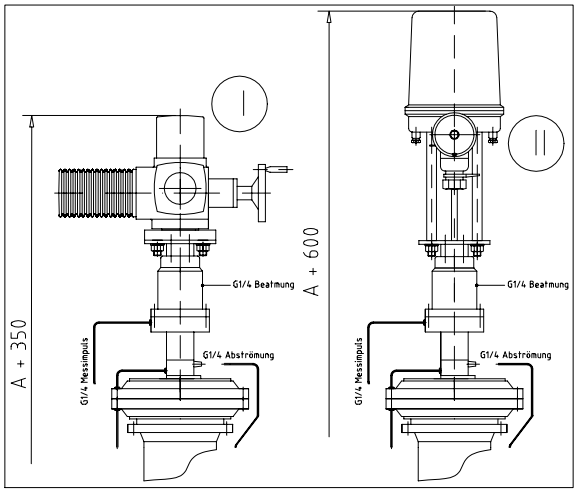

For applications with changing pressure ratios or plants with changing operating modes the controldevice of the overflow regulator can be equipped with a motor actuator instead of the hand wheel. Using the motor drive, set value of the control regulator and with this response pressure can be varified while running plant.

External Control Nozzle

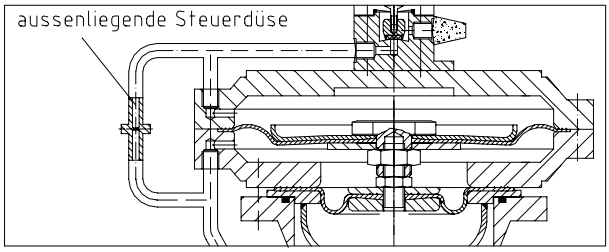

External control nozzle is used when:
- soiling and blockaging is expected or a moist gas is used,
- steel diaphragm housing or control regulator RUHH is used,
- an easier and faster accessibility to the control nozzle is required.

The connections of the control nozzle are produced with Ermeto-Pipes 10L as a standard.

Piston Valve K

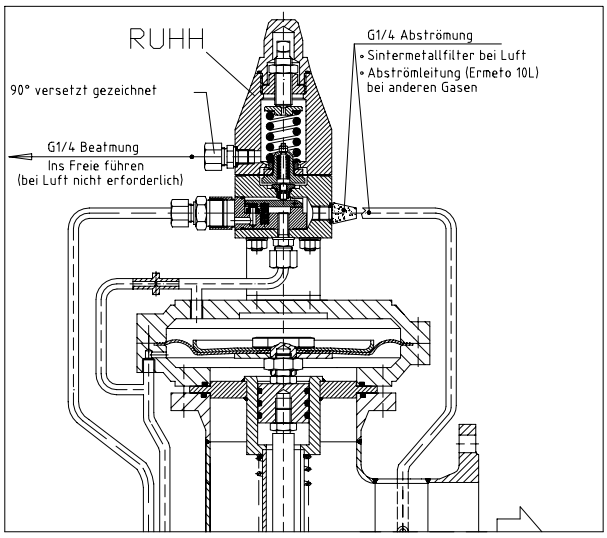

For gas pressure above 7,5 bar piston valve in combination with control regulator **RUHH** is used (addition K in type designation).
The piston replaces the compensating diaphragm while having the same function and due to ist design it is capable to equalise large pressure ratios between supply and discharge pessure without deformation.

Position Indicator

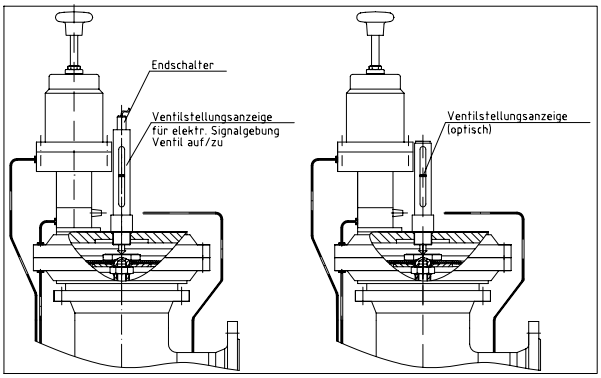

The indicator for optical or electronic signalling of the valve position can be installed optional at each overflow regulator type. The position of the working diaphragm suspension is transferred mechanically to the indicator.
The indicator can be fitted with a limit switch to generate an electronic signal e.g. for a control panel or a monitoring device.

Changing Operating Modes or Gases

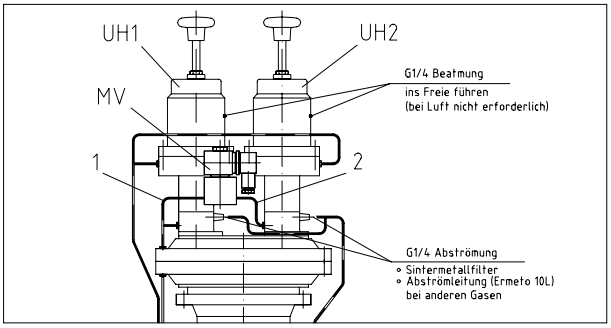

By combining several control devices and cicuitry with solenoid valves it is possible to realise different pressures or operating cases with one overflow regulator.
When handling e.g. two operating modes with a regulator type 94 the control device **UH1** is set to the higher pressure and normally in function. Control device **UH2** with a lower set value becomes active when solenoid valve **MV** is opened. In case of more than two operating modes or other regulator types adequate installation is required.

Design Control Gear

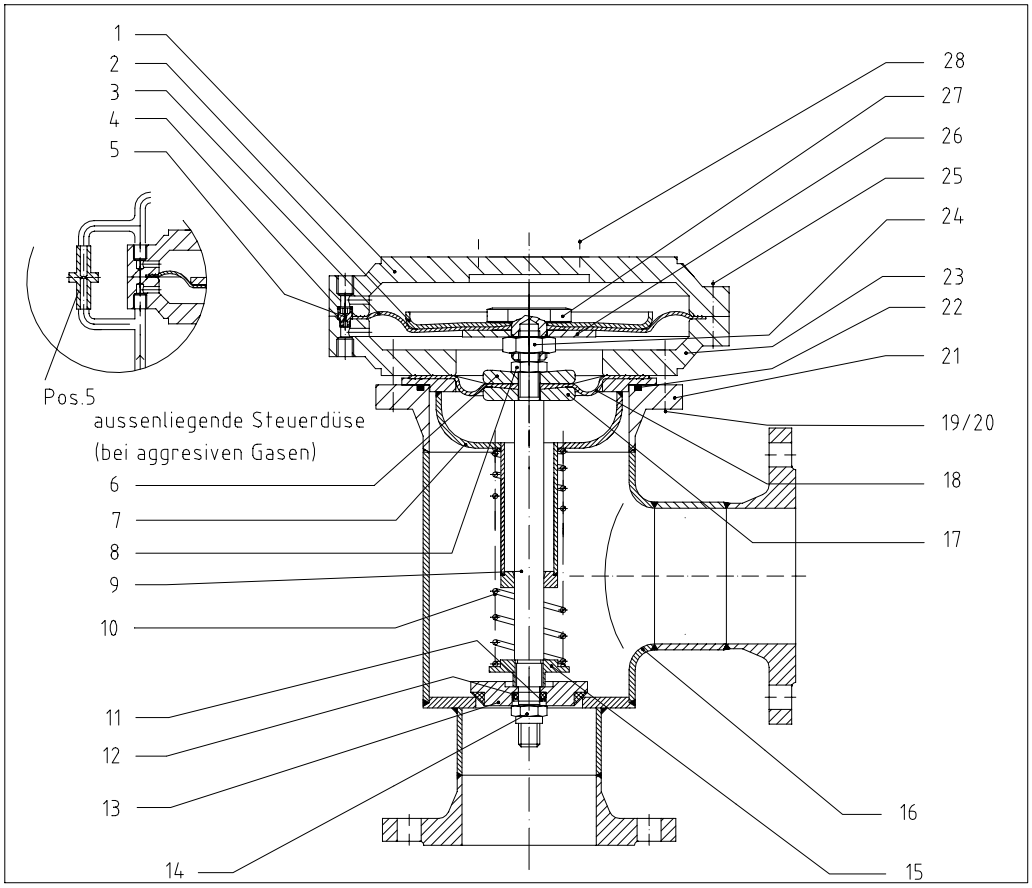

Special Maintenance Instructions

Performing a maintenance the control gear has to be checked on sealed closure of cone valve **13**, for wear of the diaphragms **3** and **18** and on tightness against atmosphere.
Cone valve **13** is tight, if by running plant no remarkable temperature increase occurs or no audible overflow occurs (prescribed set value is not reached).
To remove cone valve **13** first screws **25** have to be undone and diaphragm housing can be removed. After that working diaphragm **3** can be unscrewed. Releasing screws **19** compensating diaphragm **18** together with valve suspension **9**, valve guide **7** and cone valve **13** can be removed as a whole.
Now all wearing parts have to be replaced.

When installing it is to insure that items **4, 11**, **12**, and **20** are exchanged too.
Cone valve **13** has to stand centrally on the valve seat so that during the assembly compensator diaphragm **18** automatically centers itself in the lower diaphragm housing **23**. When installing working diaphragm **3** the prescribed maximum valve run has to be achieved again.
Following equation as a rule of thumb can be used:

$$\text{Valve Run}_{[mm]} = \text{ValveØ}_{[mm]} \times 0{,}25$$

The valve run is measured between working diaphragm suspension **27** and the upper diaphragm housing **1**.

Special Maintenance Instructions
Control Regulator

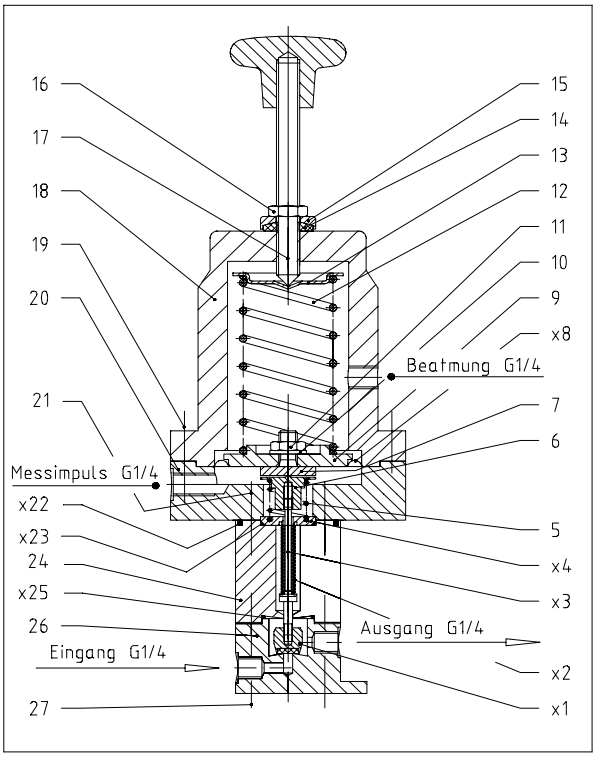

Control Regulator

For maintanance the control regulator has to be dismantled from the main device. Each time before taking apart the regulator, the adjustment spring **12** has to be relaxed by turning cross handle **17** to the left.
Especially diaphragm **8**, spring body **2,** valve suspension **3,** flange **4 a**nd control valve **1** have to be checked for wear.
By undoing screws **19** the diaphragm **8** with suspension **7** can be removed and checked. By unscrewing spring cap **6** and undoing screws **21** and **27** as well as nut **28** directly above the control valve **1** it can be unscrewed from controller set (**2,3,4**). The set can be removed and has to be checked. To maintain general operating safety the set should be replaced every three years latest.
When installing it is to insure that items **4, 11**, **12**, and **20** are exchanged too.
Cone valve **13** has to stand centrally on the valve seat so that during the assembly compensator diaphragm **18** automatically centers itself in the lower diaphragm housing **23**. When installing working diaphragm **3** the prescribed maximum valve run has to be achieved again.
Following equation as a rule of thumb can be used:
The valve run is measured between working diaphragm suspension **27** and the upper diaphragm housing **1**.
When assembling it has to be ensured that:
- control valve **1** is screwed up until approx. ¼ turns before the limit of the controller set (**2,3,4**),
- spring cap **6** is only screwed on controller set (**2,3,4**) so wide that when pressing spring cap **6** the loosely placed regulator base **26** is lifted approx. 2 mm from the seat of regulator body **24** by control valve **1**.

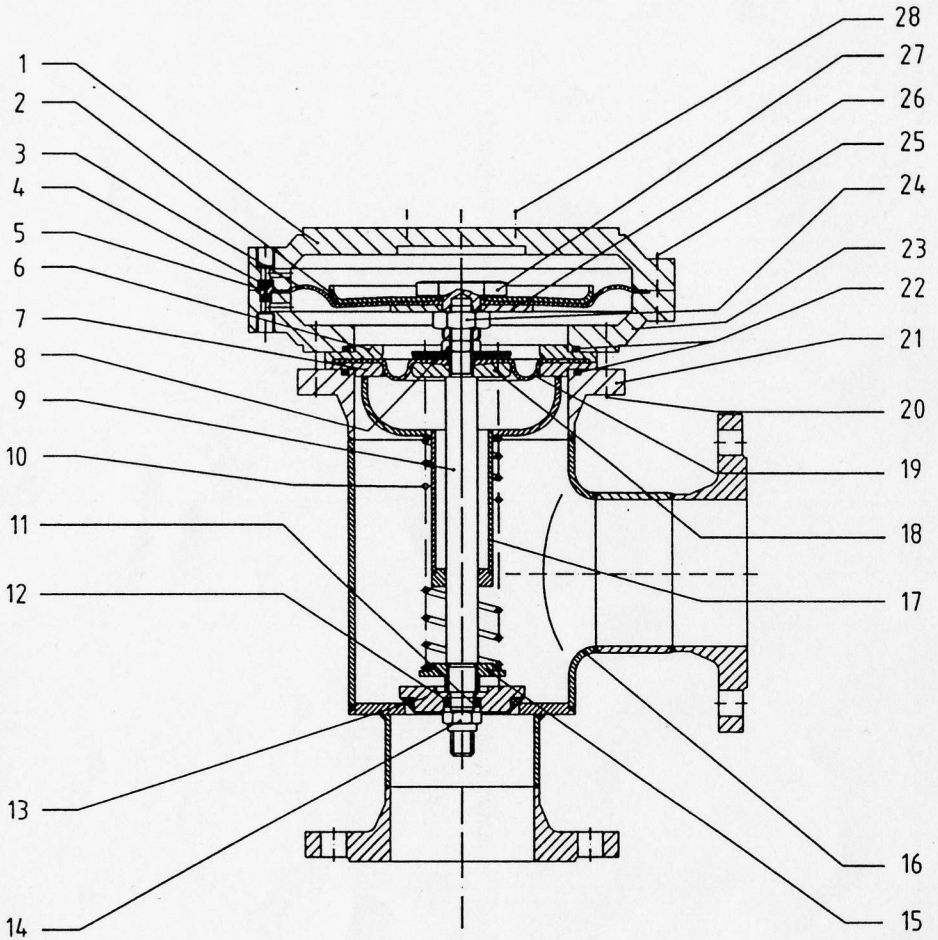

X: waer parts; keep for maintenance in stock

Item	Quantity		Description	Norm / Drw.-no	Material / Remerk
1	1	Pc.	Diaphragmhousing,upper		GGG 40/St
2	1	Pc.	Diaphragmdisc		St
x3	1	Pc.	Workingdiaphragm		Perbunan
x4	1	Pc.	Control nozzle sealing	8x 12 x 6	Perbunan
5	1	Pc.	Control nozzle		VA
6	1	Pc.	Diaphragm ring, upper		St
7	1	Pc.	Diaphragm ring lower		St
x8	1	Pc.	Nut	DIN439, M16	St
9	1	Pc.	Valve alignment		VA
x10	1	Pc.	Closing spring		Springsteel C
x11	2	Pc.	Saeling ring 16x24x1.5	DIN7603A	Cu
x12	1	Pc.	O-Ring	16x5	Perbunan
x13	1	Pc.	Controlvalve		Al, Perbunan
x14	1	Pc.	Safety nut	DIN 982, M16	St
15	1	Pc.	Spring disc		St
16	1	Pc.	Regulator body		St
17	1	Pc.	Valveguide		St
18	1	Pc.	Diaphragm disc		St
x19	8	Pc.	Compansation diaphragm		Perbunan
20	8/12	Pc.	Screw	DIN 912, M12x20/30	8.8
21	2	Pc.	Bodyflange		St
x22	2	Pc.	Stringsealing	Ø5 mm	Perbunan
23	1	Pc.	Diaphragm housing,lower		GGG40/St
24	1	Pc.	Nut	DIN 431, G3/4	St
25	8/12	Pc.	Screw	DIN 912, M12x20/30	8.8
26	1	Pc.	Diaphragm disc		Al
27	1	Pc.	Diaphragm fastening		Al
28	2	Pc.	Socked head cup screw	DIN 912, M8x15	8.8

Regler + Armaturen Terschüren GmbH Mausegatt 26 D-47228 Duisburg	**Overflowregulator**	**type 94E** **Drw. -no.: 3-94E**

Regler + Armaturen Terschüren GmbH Mausegatt 26 D-47228 Duisburg		**for Drw. -no.: 3-94E**

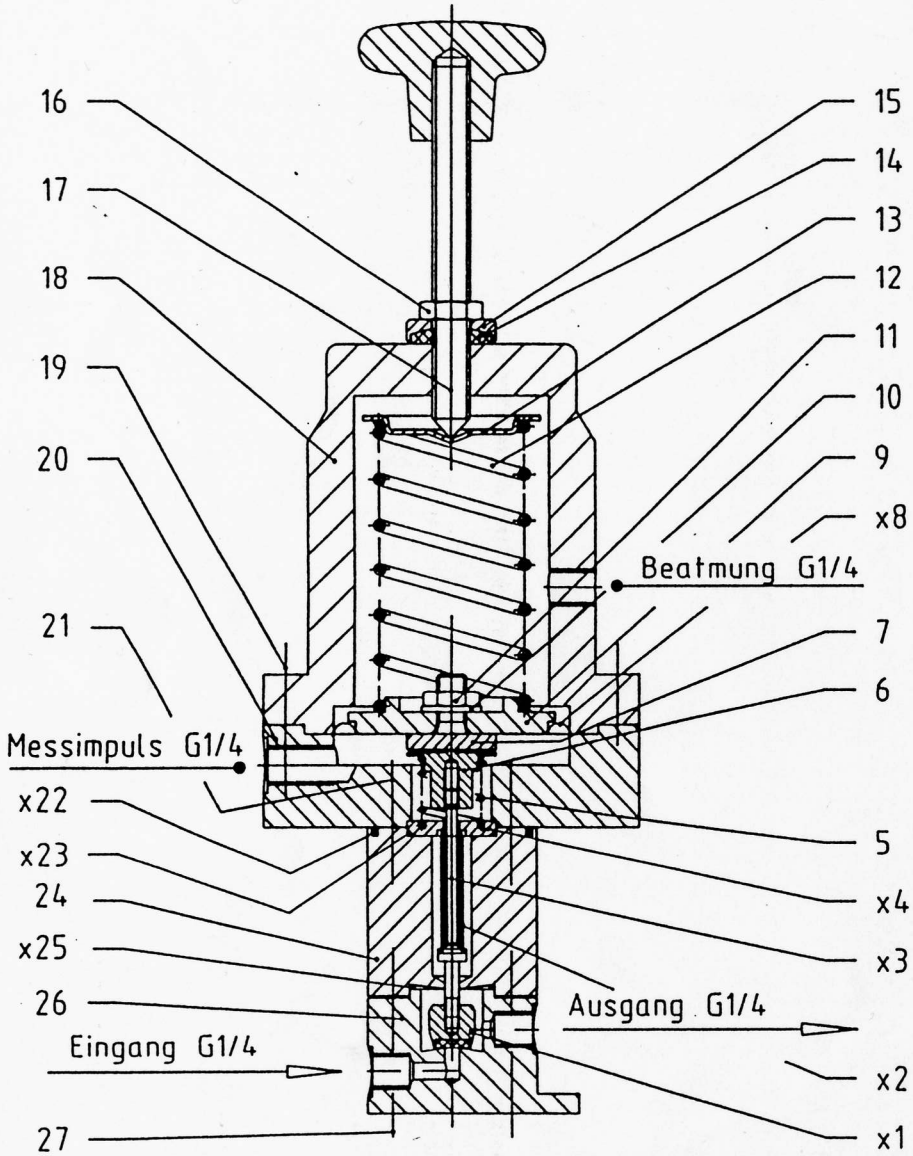

X: wear parts; keep for maintenance in stock

Item	Quantity		Description	Norm / Drw.-no	Material / Remerk
x1	1	Pc.	Controlvalve		Ms
x2	1	Pc.	Spring body		Bronce
x3	1	Pc.	Valve alignment		VA
x4	1	Pc.	Soldaring flange		VA
5	1	Pc.	Closing spring		Spring steel C
6	1	Pc.	Spring cover		VA
7	1	Pc.	Diaphragm alignment		VA
x8	1	Pc.	Diaphragm		Perbunan
9	1	Pc.	Diaphragm disc		Al
10	1	Pc.	Washer Ø10,5x2,5	DIN 125; 10.5x2.5	St
11	1	Pc.	Nut	DIN 439; M10	St
12	1	Pc.	Command value spring		Springsteel C
13	1	Pc.	Spring disc		St
14	1	Pc.	Spindel screw seal		Perbunan
15	1	Pc.	Pressure ring		Ms
16	1	Pc.	Nut	DIN 431; G1/4	St
17	1	Pc.	Hand wheel with spindel		Ms, Duroplast
18	1	Pc.	Diaphragm housing, upper		Al
19	8	Pc.	Socked head cup screw	DIN 912; M6x20	8.8
20	1	Pc.	Diaphragm housing lower		Al
21	4	Pc.	Socked head cup screw	DIN 912; M6x25	8.8
x22	1	Pc.	O-ring	48x4	Perbunan
x23	1	Pc.	O-ring	26x2	Perbunan
24	1	Pc.	Regulator body		Al
x25	1	Pc.	O-ring	26x2	Perbunan
26	1	Pc.	Base plate		Al
27	4	Pc.	Socked head cup screw	DIN 912; M6x50	8.8

Regler + Armaturen Terschüren GmbH Mausegatt 26 D-47228 Duisburg	**Control regulator**	**type UH** **Drw. -no.: 3-UH**	**Regler + Armaturen Terschüren GmbH Mausegatt 26 D-47228 Duisburg**	**for Drw. -no.: 3-UH**

COMPETENCE
IN GAS!

ARMATUREN GmbH

OUR PRODUCT PROGRAM

DIN-DVGW

- Gas-Take Over Stations
- Gas-Regulaton Cabinets
- Station Accessories
- Gas-Pressure Regulators
- Safety Shut Off Valves
- Safety Relief Valves
- Overflow Regulatores
- Vaccum Regulatores
- Differential Pressure Regulators
- Special Design Regulators

OUR ADMISS IONS

Certified according
to DIN EN ISO 9001

Production of Gas Stations
DVG W (working paper) G493/1

Maintenance of Gas Stations
DVG W (working paper) G493/2

W2 Armaturen GmbH

Dr.-Alfred-Herrhausen-Allee 44a | 47228 Duisburg, Germany
T (020 65) 77 09 60 | F (020 65) 77 09 66 | info@w2-armaturen.de | www.w2-armaturen.de